Protectowire Linear Heat Installation Accessories

Part#: PM-3A & PM-3B

Pipe Mounting Strap.

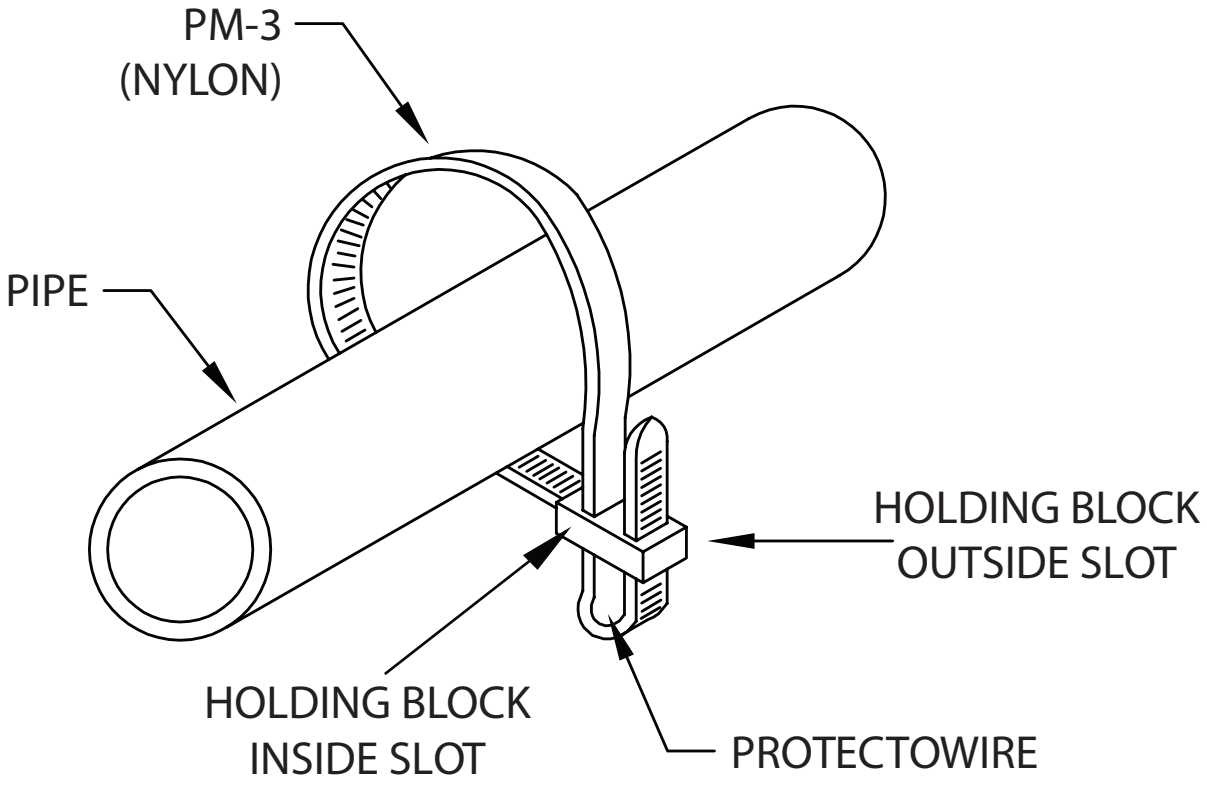

Directions for Installing

1. Wrap primary loop around pipe with serrations on the inside (next to pipe).

2. Put pointed end of strap through the inside slot in the holding block next to the pipe and pull up tight with your fingers, arranging the strap holding block to be in the position the detector is to be located.

3. Wrap the secondary loop around the detector and gently insert the strap end in the outside slot of the holding block and tighten to secure the detector. Do NOT over tighten.

4. If desired, cut or remove excess straping protruding from the holding block.

Information

- Double loop pipe strap compatible with all Protectowire Linear Heat Detectors.
- Material: Nylon 6/6
- Temperature: -40°F (-40°C) to 185°F (85°C)
- Resistance: UV stablized
- Maximum Recommended Spacing: 5 ft. (1.5M)
- Part Number: PM-3A - pipesize 3/4" (19mm) to 2" (51 mm)
- Part Number: PM-3B - pipesize 2 1/2" (63mm) to 3 1/2" (89mm)

The Protectowire Company, Inc., 60 Washington Street, Pembroke, MA 02359 U.S.A | 781-826-3878 | protectowire.com
© 2021, The Protectowire Company, Inc. All rights reserved. ISO 9001 Registered Company